第3卷 第2期　　复 合 材 料 学 报　　Vol. 3 No. 2

1986年6月　　ACTA MATERIAE COMPOSITAE SINICA　　June 1986

纤维增强层板的杂交模型及其应用

刘 正 兴

（上海交通大学工程力学系）

摘　要

根据修正余能原理导出的杂交应力模型，可用于纤维增强叠层各向异性板的分析。这类板的横向剪切变形效应必须予以考虑，因而层板不同层的表面法线的轉角是不同的。算例表明本文导出的杂交应力模型具有較高的数值精度。

一、修正的余能原理和杂交模型

当单元间边界力的平衡条件作为约束条件，相应的边界位移作为拉格朗日乘子引进时，余能泛函可表示为[1]

$$\Pi_{mc}=\sum_n\left[\int_{\partial V_n}\frac{1}{2}S_{ijkl}\sigma_{ij}\sigma_{kl}dV-\int_{\partial V_n}T_iu_idS+\int_{S_{\sigma_n}}\overline{T}_iu_idS\right] \quad (1)$$

如果每个单元又被进一步划分成若干子区间时，则有[2]，[3]

$$\Pi_{mc}=\sum_n\left\{\sum_m\left[\int_{V_{nm}}\frac{1}{2}S_{ijkl}\sigma_{ij}\sigma_{kl}dV-\int_{A_{nm}}T_iu_idA\right]\right.$$
$$\left.-\int_{\partial V_n}T_iu_idA+\int_{A_{\sigma_n}}\overline{T}_iu_idA\right\} \quad (2)$$

对每个子区间，可选取滿足平衡方程的应力函数

$$\{\sigma\}=[P]\{\beta\} \quad (3)$$

表面力$\{T\}$可以用广义力$\{R\}$表示为

$$\{T\}=[\phi]\{R\} \quad (4)$$

或以应力表示成

$$\{T\}=[\psi]\{\beta\} \quad (5)$$

由此可导出

$$\{R\}=[B]^T\{\beta\} \quad (6)$$

本文1985年11月收到，1986年2月收到修改稿

$$\{\lambda\}=\int_{A_{nm}}[\phi]^T\{u\}dA \tag{7}$$

其中边界位移可用边界节点位移$\{q\}$内插成

$$\{u\}=[L]\{q\} \tag{8}$$

于是（2）式可化成

$$\Pi_{mc}=\sum_n(\Pi_{mc})_n=\sum_n[\sum_m(\frac{1}{2}\{\beta\}^T[H]\{\beta\}-\{\beta\}^T[B]\{\lambda\})$$
$$-\{\beta\}^T[G]\{q\}-\{Q\}^T\{q\}] \tag{9}$$

再将一个单元中的子区间集合在一起，例如，以$\{\bar{\beta}\}$表示此单元内全部子区间总的应力参数，即

$$\{\bar{\beta}\}_n=[\{\beta\}_1^T,\ \{\beta\}_2^T,\ \cdots,\ \{\beta\}_m^T]_n^T \tag{10}$$

再由驻值条件最终可导出杂交应力单元的节点平衡方程

$$[K]\{\bar{q}\}-\{\bar{Q}\}=0 \tag{11}$$

其中

$$[K]=[\bar{G}]^T[H]^{-1}[\bar{G}]-[\bar{G}]^T[\bar{H}]^{-1}[\bar{B}]([\bar{B}]^T[\bar{H}]^{-1}[\bar{B}])^{-1}[\bar{B}]^T[H]^{-1}[\bar{G}]$$

二、矩形层板单元

第i层的应力場可取为

$$\sigma_x=\beta_1+\beta_4x+\beta_7y+z_i(\beta_{10}+\beta_{13}x+\beta_{16}y)$$
$$\sigma_y=\beta_2+\beta_5x+\beta_8y+z_i(\beta_{11}+\beta_{14}x+\beta_{17}y)$$
$$\cdots\cdots\cdots\cdots\cdots\cdots\cdots\cdots$$

记作　　$\{\sigma\}_i=[p]_i\{\beta\}_i$

而边界位移则表示成

$$u_{AB}^i=\frac{1}{2}(u_A^{i+1}+u_A^i)(1-\xi_1)+\frac{1}{2}(u_B^{i+1}+u_B^i)\xi_1+\zeta_i[(u_A^{i+1}-u_A^i)(1-\xi_1)$$
$$+(u_B^{i+1}-u_B^i)\xi_1]$$
$$\cdots\cdots\cdots\cdots\cdots\cdots\cdots\cdots\cdots\cdots$$

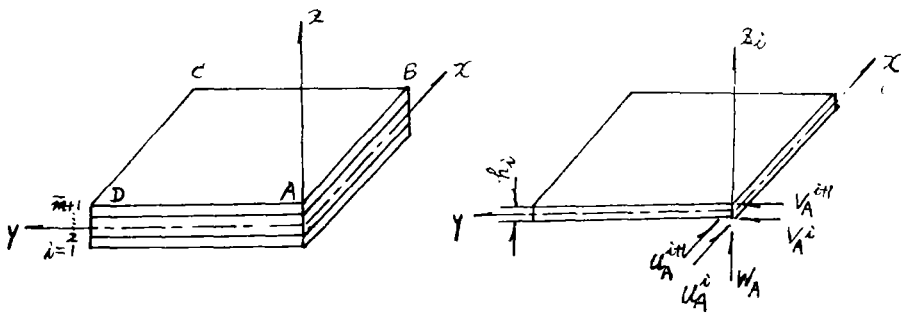

图1　矩形层板单元

边界力可表示成

$$P^i_{xAB}=-\tau^i_{xy}=-[\beta_3+\beta_6x+\beta_9y+z_i(\beta_{12}+\beta_{15}x+\beta_{18}y)]$$

……

我们将轴取得与纤维纵向一致，则有横观各向同性材料的应力应变关系

$$\{\varepsilon\}=[\bar{S}]\{\sigma\} \tag{13}$$

当纤维纵向与x轴成θ角时（图5），则有

$$\{\varepsilon\}=[S]\{\sigma\} \tag{14}$$

其中 $[S]=[\lambda T]^T[\bar{S}][\lambda T]$

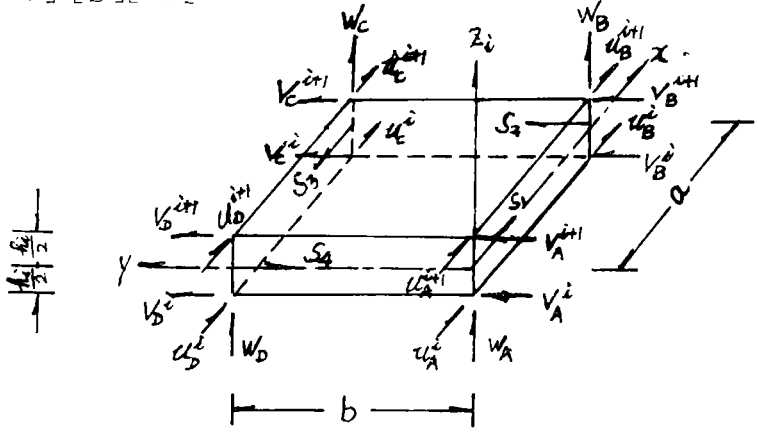

图2 节点位移

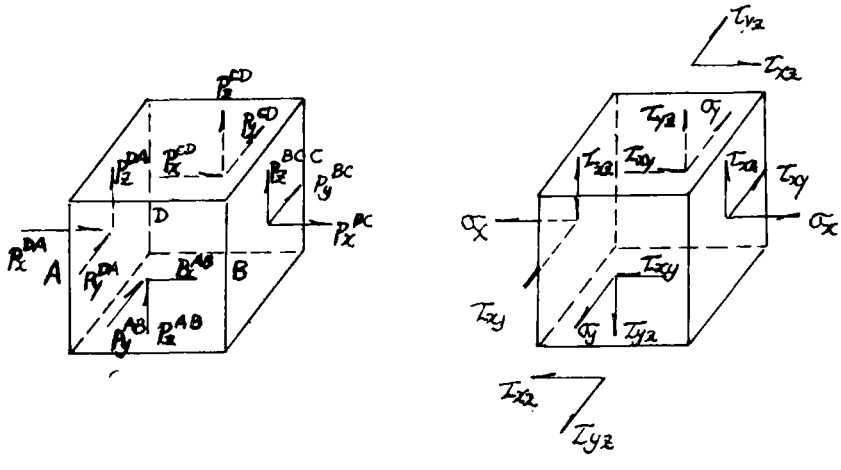

图3 边界力和应力

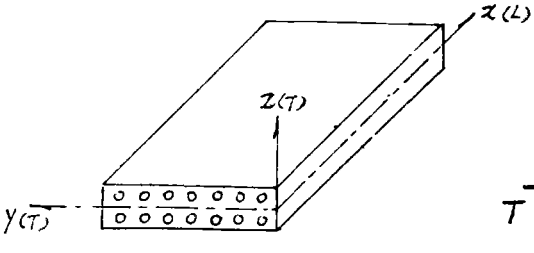

图4 $x//L$

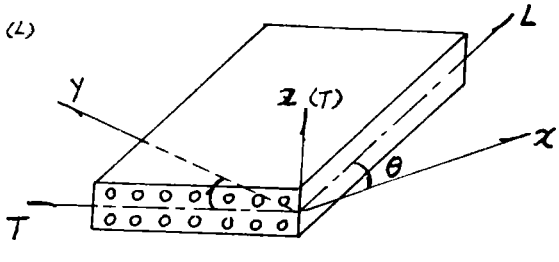

图5 x与L成θ角

三、算 例

1. 正弦分布横向载荷作用下的三层简支方板

横观各向同性的、单向纤维材料组成的单支方板，其刚度特性模拟一个高模数石墨/环氧树脂复合材料[4]。取四分之一板计算，划分为4×4网格，计算结果列入表1。

表中$\overline{\omega}=\frac{\omega}{h}$，$\bar{\sigma}=\frac{\sigma h^2}{p_0 a^2}$，$\bar{\tau}=\frac{\tau h^2}{p_0 a^2}$

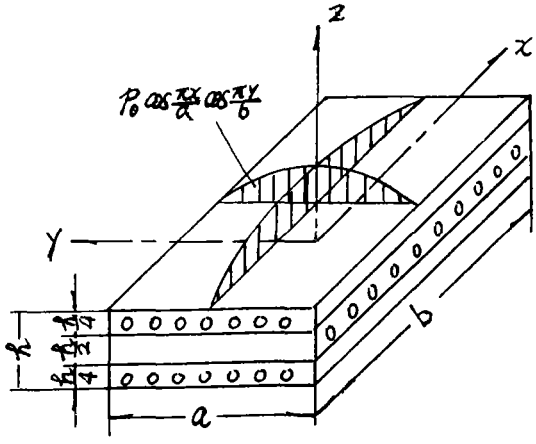

图6 三层方板

2. 正弦分布横向载荷作用下的三层简支矩形板

将上例改为长宽比$b/a=3$，计算结果列入表2。

表1 正弦载荷作用下的三层简支方板的挠度与应力

S	計算方法	中心挠度 $\bar{w}$	应力 (+ −) $\sigma_x\left(0,\ 0,\ \pm\frac{h}{2}\right)$	应力 (+ −) $\sigma_y\left(0,\ 0,\ \pm\frac{h}{4}\right)$	应力 (+ −) $\tau_{xy}\left(\frac{a}{2},\frac{b}{2},\pm\frac{h}{2}\right)$
5	本 文 解	2.958	0.419	0.501	0.0280
10	*Pagano*[5]	1.709	0.559	0.403	0.0276
	Mawenya[6]	2.034	0.542	—	0.0292
	本 文 解	1.615	0.551	0.382	0.0267
20	*Pagano*[5]	1.189	0.543	0.309	0.0230
	Mawenya[6]	1.273	0.546	—	0.0239
	本 文 解	1.175	0.537	0.299	0.0228
25	本 文 解	1.091	0.509	0.278	0.0201
50	*Pagano*[5]	1.031	0.539	0.276	0.0216
	Mawenya[6]	1.048	0.550	—	0.0221
	本 文 解	1.029	0.533	0.269	0.0208
100	*Pagano*[5]	1.008	0.539	0.271	0.0214
	Mawenya[6]	1.015	0.551	—	0.0213
	本 文 解	1.005	0.521	0.264	0.0207

表2　正弦载荷作用下的三层简支矩形板的挠度与应力

S	計算方法	中心挠度 $\bar{w}$	应力 (±) $\bar{\sigma}_x\left(0,\ 0,\ \pm\frac{h}{2}\right)$	(±) $\bar{\sigma}_y\left(0,\ 0,\ \pm\frac{h}{6}\right)$	(±) $\bar{\tau}_{xy}\left(\frac{a}{2},\ \frac{b}{2},\ \pm\frac{h}{2}\right)$
5.0	本文解	1.692	0.596	0.0690	0.0177
	Pagano[4]	0.919	0.725	0.0435	0.0123
6.25	*Mawenya*[6]	1.141	0.685	——	0.0141
	本文解	0.902	0.618	0.0414	0.0102
	Pagano[4]	0.610	0.650	0.0299	0.0093
12.5	*Mawenya*[6]	0.664	0.651	——	0.0099
	本文解	0.632	0.660	0.0312	0.0091
25	本文解	0.551	0.605	0.0263	0.0082
	Pagano[4]	0.520	0.628	0.0259	0.0084
50	*Mawenya*[6]	0.529	0.640	——	0.0087
	本文解	0.518	0.631	0.0248	0.0085
	Pagano[4]	0.508	0.624	0.0253	0.0083
100	*Mawenya*[6]	0.510	0.638	——	0.0085
	本文解	0.513	0.642	0.0257	0.0088

参考文献

[1] K.Washizu, Variational Methods in Elasticity and Plasticity, Pergamon Press, 1982.

[2] T.H.H. Pian and P.Tong, "Basis of Finite Element Methods for Solid Continua", Int. J. for Numerical Meth. in Engng., Vol.1, 1969, PP.3—28.

[3] K.Washizu, Outline of Variational Principles in Elasticity, Series in Computer Oriented Structural Engineering, Vol. Ⅰ-3-A, Baifukan Publishing, Tokyo, 1972.

[4] N.J.Pagano, "Exact Solutions for Rectangular Bidirectional Composites and Sandwich Plates", J.Composite Materials, Vol.4, Jan. 1970, pp.20-34.

[5] N.J.Pagano and S.T. Hatfield, "Elastic Behavior of Multilayer Composites", AIAA.J.10, pp. 931—933 (1972).

[6] A.S.Mawenya and J.D.Daves, "Finite Element Bending Analysis of Mulilayer Plates", Int.J.Num.Meth.Engin., 8, pp. 215—225 (1974).

fiber reinforced composite material using the chain-bandle strength and is testified by the tension experimients of unidirectional laminates. According to this statistical strength model, the strength of unidirectional fiber reinfored composite materials is in accordance with Weibull distribution, $F(\sigma)=1-\exp\left\{-\sigma\Big/\left(\frac{1}{NV}\right)^{-\frac{1}{n\beta}}\sigma_n^*\right\}^{n\beta}$, when the fiber strength is Weibull distribution, $Q(\sigma)=1-\exp(\sigma/\sigma_0)^{\beta}$. The Weibull strength distribution can demonstrate obvious size effect. The conclusion agrees well with other author's.

EXPERIMENTAL DETERMINATION OF ELASTIC CONSTANTS FOR UNIDIRECTIONAL COMPOSITES

Wang Bingquan and Yang Yinping

Harbin FRP Institute, Harbin, China

(Received October 1985)

ABSTRACT

This paper reviewed a lot of existing formulas for predicting the elastic constants of unidirectional composites. The results predicted from these formulas were compared with experimental data for unidirectional Glass/Epoxy and Graphite/Epoxy composites. Some of the formulas were recommanded for calculating the elastic constants of unidirectional composites.

HYBRID MODEL OF COMPOSITE LAMINATS AND ITS APPLICATIONS

Liu Zhengxing

Department of Engineering Mechanics
Shanghai Jiao Tong University, Shanghai, China

(Received November 1985)

ABSTRACT

The hybrid stress model for fiber reinforced composite laminates is derived by the

principle of modified complementary energy. The effect of transverse shear deformation is considered and angle of rotation of surface normal for each layer is different.

Several numerical examples are solved, including a sandwich plate at a series of span-to-depth ratios, and they are compared with the results from classical laminated plate theory.

TENSION-TENSION FATIGUE LIFE DISTRIBUTION OF UNIDIRECTIONAL GRAPHITE/EPOXY COMPOSITE

Yang Naibin and Fu Huimin

Department of Flight Vehicle Design and Applied Mechahics
Beijing Institute of Aeronautics and Astronautics, Beijing, China

(Received August 1985)

ABSTRACT

In order to study the fatigue life distribution of unidirectional graphite/epoxy composite, 50 specimens were tested at same stress level ($\sigma_{max} = 48$ kgf/mm^2). χ^2 test and check with the graph on the normal probability paper are used. If the logarithmic fatigue life of these 50 specimens as a sample is taken from same population of Gaussian distribution, the theoretical frequncy function of this normal population can be obtained

$$f(x) = \frac{1}{0.8926\sqrt{2\pi}} \exp\left\{-\frac{(x-6.006)^2}{2\times 0.8926^2}\right\}$$

Because of $$\chi_q^2 = \sum_{i=1}^{5} \frac{(n_i - E_i)^2}{E_i} = 0.1922$$

and $$\gamma = m - 3 = 2, \alpha = 10\%, \chi^2(2) = 4.605$$

then $$\chi_q^2 < \chi^2(2)$$

These data are drawn on normal probability paper and we find these data are located near the line

$$\log N = 6.0049 + 0.9330\ U_p$$

with linear dependence coefficient $r = 0.9950$. The test data of 50 specimens at same stress levl show that the tension-tension fatigue life distribution of unidirectional graphite/epoxy composite follows the logarithmic Gaussian distribution.

MY REGARDS TO ACTA MATERIAE COMPOSITAE SINICA

Dr Yokoyama Ryoji

President of Hitachi Chemical Co., Ltd. No, 1-1-2-chome,
Nishishinjuku, Shinjuku-ku, Tokyo 163, Japan